J-SUCCEED CO. LTD.
TEL: +86 15869110800
E-mail: support@jsucceed.cn

capsonic

ALUMINUM ELECTROLYTIC CAPACITORS

This product is completed the Lead-free & RoHS2.0 & Halogen-free.

SPECIFICATION FOR APPROVAL

No.	Customer No.	PartNo.	Description	ΦD x L
1		**TNUP-400-V220-MH200-T_A5.0**	400V22μF	12.5X20

J-SUCCEED CO. LTD.
TEL: +86 15869110800
E-mail: support@jsucceed.cn

capsonic

Make/Revised Curriculum Vitae

Version	Date	Res.	Content	Checked

J-SUCCEED CO. LTD.
TEL: +86 15869110800
E-mail: support@jsucceed.cn

capsonic

CONTENTS

NO.	ITEMS
1	Scope
2	Operating Temperature Range
3	Characteristics
4	Frequency Coefficient for Ripple Current
5	Coefficient of Temperature for Ripple Current
6	Max. Impedance Ratio
7	Characteristics Table
8	Marking
9	Inner conformation drawing and inner constitute parts(curtness drawing)
10	Electrical Characteristics
11	Mechanical Characteristics
12	Reliability
13	Part No.
14	Product Processing Diagram
15	Packing
16	Guidelines and Precautions

J-SUCCEED CO. LTD.
TEL: +86 15869110800
E-mail: support@jsucceed.cn

capsonic

1.Scope

This specification covers“**NUP** series” miniature single-ended aluminium electrolytic capacitors.

2.Operating Temperature Range

Operating temperature range is the range of ambient temperature at which the capacitor can be operatedcontinuously at rated voltage.

3.Characteristics

Unless otherwise specified, the standard range of atmospheric conditions for making measurements and tests are as follows.

Ambient temperature ： 15 to 35℃

Air pressure：86kpa to 106kpa

If there may be doubt on the results, measurements shall be made within the following limits.

Ambient temperature ： 20±2℃

Air pressure：86kpa to 106kpa

4.Frequency Coefficient for Ripple Current

Rated voltage (V)	Frequency (Hz) / Capacitance(μF)	50 · 60	120	1K	10K	100K
6.3-100	CAP≤10	0.80	1.00	1.30	1.65	1.70
	10<CAP≤100	0.80	1.00	1.23	1.48	1.53
	100<CAP≤1000	0.80	1.00	1.16	1.35	1.38
	1000<CAP	0.80	1.00	1.11	1.25	1.28
160 to 500	0.47 to 330	0.80	1.00	1.30	1.40	1.60

5.Coefficient of Temperature for Ripple Current

Temperature (℃) / Rated voltage (V)	70 or less	85	105
6.3 to 100	2.00	1.70	1.00
160 to 500	1.80	1.40	1.00

NOTE:Temperature coefficient is not used in life formula but for reference.

6.Max. Impedance Ratio

Low temperature characteristics	Rated voltage(V)		6.3	10	16	25-100	160-250	350-500	120Hz
	Impedance ratio (max)	$Z_{(-25℃)}/Z_{(+20℃)}$	4	3	3	2	3	3	
		$Z_{(-40℃)}/Z_{(+20℃)}$	8	6	4	3	8	6	

J-SUCCEED CO. LTD.
TEL: +86 15869110800
E-mail: support@jsucceed.cn

capsonic

7.Characteristics Table

Aluminum Electrolytic Capacitor Specification				
Series	TNUP	400 V 22 μF	Part No.	TNUP-400-V220-MH200-T_A5.0
Customer No.	/		Case size	ΦD12.5 X L20
Specification	Items		Standard	
	Operating temperature range		- 40~ + 105	
	Capacitance tolerance		±20% (20℃ ,120Hz)	
	Dissipation factor (MAX)		Less than 0.15 (20℃ ,120Hz)	
	Leakage current (MAX)		Less than 264 μA (20℃ 400 V 1 min)	
	ESR(MAX)		/	
	Ripple current (MAX)		148 mArms(120Hz ,105℃)	
	Load life		2000 hrs	
Outline	Dimensions			
	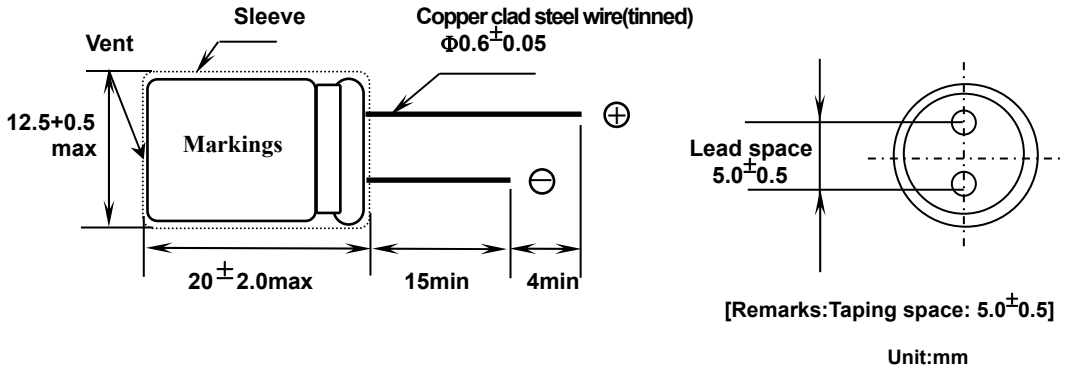			

J-SUCCEED CO. LTD.
TEL: +86 15869110800
E-mail: support@jsucceed.cn

8. Marking

8.1 Marking on capacitors include:

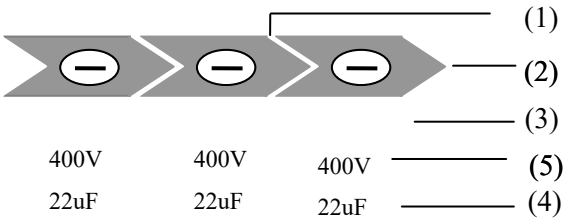

Front Side

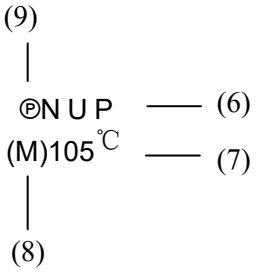

Back Side

NO.	ITEM
1	Direction of current
2	Polarity
3	Brand
4	Capacity
5	Voltage
6	Series
7	Temperature
8	Tolerance
9	℗ / Sleeve material (PET)

8.2 Marking color ：

Sleeve color: Black PET

Marking color: White

J-SUCCEED CO. LTD.
TEL: +86 15869110800
E-mail: support@jsucceed.cn

9.Inner conformation drawing and inner constitute parts(curtness drawing)

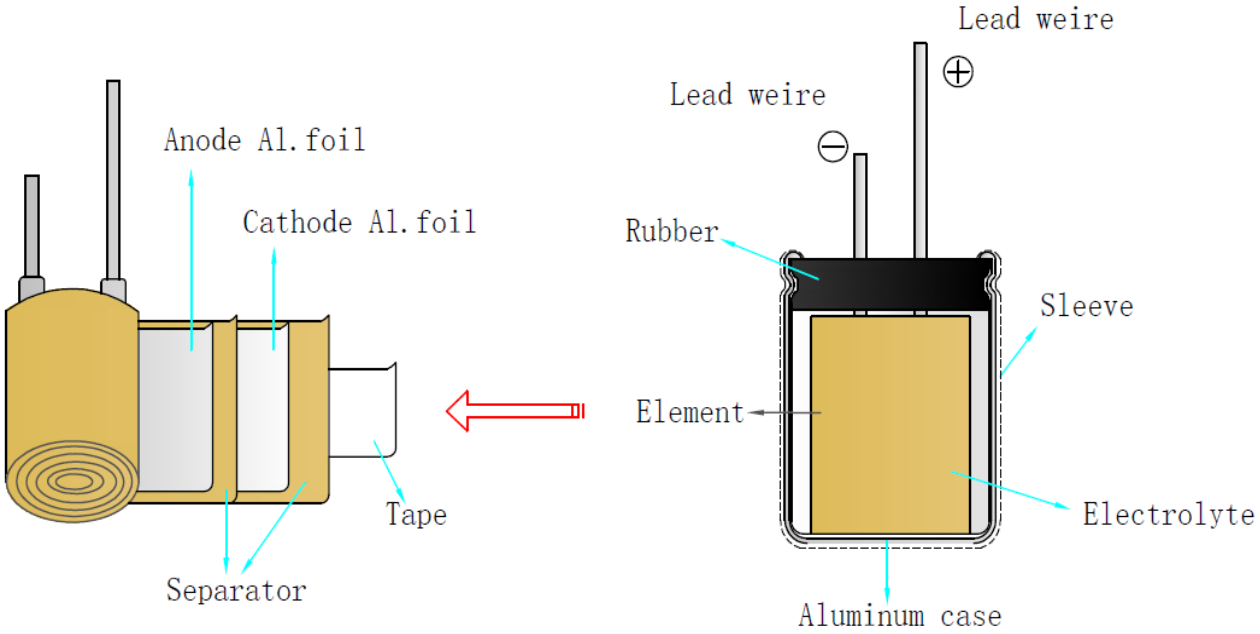

Composing Parts	Material
Anode Foil	Aluminum Foil
Cathode Foil	Aluminum Foil
Paper	Cellulose
Lead Wire	Fe+Al+Cu+Sn
Lead Wire	Fe+Al+Cu+Sn
Seal	Rubber
Case	Aluminum
Sleeve	PET
Electrolyte	EG
Tape	OPP

J-SUCCEED CO. LTD.
TEL: +86 15869110800
E-mail: support@jsucceed.cn

capsonic

10. Electrical Characteristics ：

NO.	ITEM	TEST METHOD	SPECIFICATION
10.1	Rated voltage	Voltage: DC voltage + peak ripple voltage≤Rated voltage	See 6.Characteristics Table
10.2	Capacitance	1. Measuring frequency:120Hz±12Hz 2. Measuring voltage:≤0.5Vrms+0.5VDC~2.0VDC Measuring circuit: ( )	
10.3	Dissipation factor		
10.4	Leakage current	DC leakage current shall be measured after 1~2minutes application of the DC rated working voltage through the 1000Ω resistor at 20℃ 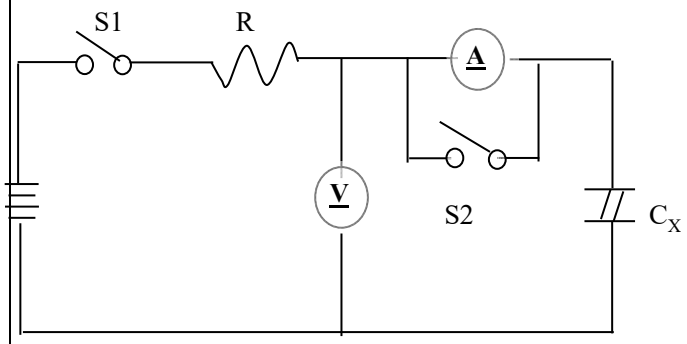 R: 1000Ω S1:Switch A: DC current meter S2:Switch for protect of current mete V: DC voltage meter C_X: Testing capacitor	6.3V-100V: Less than 0.01CV or 3μA, whichever is large（at 20℃, after 1 minutes) 160V-500V: Less than 0.03CV or 3μA, whichever is large（at 20℃, after 1 minutes) I：Leakage current(μA) C：Capacitance(μF) V：Rated voltage (V)
10.5	Temperature characteristics	STEP / TEMPERATURE / STORAGE TIME 1 / 20℃±2℃ / 30minutes 2 / -40℃±3℃ -55℃±3℃ / 2hours 3 / 20℃±2℃ / 30minutes 4 / 105℃±2℃ / 2hours Step1.Measure the capacitance and impedance. (|Z| , 20℃, 120Hz±2Hz) Step2. Measure the impedance at thermal balance after 2 hours. (|Z| , -40℃ -55℃, 120Hz±2Hz) Step4.Measure the leakage current at thermal balance after 2 hour.	Step2. Low temperature impedance stability Less than specified value. Step4. Capacitance change: within±10% of the initial measured value. Dissipation factor: Less than specified value.

<table>
<tr><th>NO.</th><th>ITEM</th><th>TEST METHOD</th><th>SPECIFICATION</th></tr>
<tr><td>10.6</td><td>Surge test</td><td>Rated surge voltage shall be applied (switch on)for 30±5 second and then shall be applied (switch off) with discharge for 5.5min at room temperature. This cycle shall be repeated for 1000 cycles. Duration of one cycle is 6±0.5 minutes.

Surge voltage:
<table>
<tr><td>Working voltage (V)</td><td>6.3</td><td>10</td><td>16</td><td>25</td><td>35</td><td>50</td><td>63</td><td>80</td><td>100</td></tr>
<tr><td>Surge voltage (V)</td><td>8</td><td>13</td><td>20</td><td>32</td><td>44</td><td>63</td><td>79</td><td>100</td><td>125</td></tr>
</table>
<table>
<tr><td>Working voltage (V)</td><td>160</td><td>200</td><td>250</td><td>350</td><td>400</td><td>450</td><td>500</td></tr>
<tr><td>Surge voltage (V)</td><td>200</td><td>250</td><td>300</td><td>400</td><td>450</td><td>500</td><td>550</td></tr>
</table></td><td>Capacitance change:
within±15% of the initial specified value.

Dissipation factor:
Less than specified value.

Leakage current:
Within initial specified value.</td></tr>
</table>

11.Mechanical Characteristics:

<table>
<tr><th>NO.</th><th>ITEM</th><th>TEST METHOD</th><th>SPECIFICATION</th></tr>
<tr><td>11.1</td><td>Lead strength</td><td>(A)Tensile strength:
Wire lead terminal:
<table>
<tr><td>d(mm)</td><td>≤0.5</td><td>0.5<d≤0.8</td><td>0.8<d≤1.25</td></tr>
<tr><td>load(kg)</td><td>0.5</td><td>1.0</td><td>2.0</td></tr>
</table>
The capacitor shall withstand the constant tensile force specified between the body and each lead for 10seconds without damage either mechanical or electrical.

（B）Bending strength:
Wire lead terminal:
<table>
<tr><td>d(mm)</td><td>≤0.5</td><td>0.5<d≤0.8</td><td>0.8<d≤1.25</td></tr>
<tr><td>load(kg)</td><td>0.5</td><td>0.5</td><td>1.0</td></tr>
</table>
With the capacitor in a vertical position apply the load specified axially to each lead. The capacitor shall be rotated slowly from the vertical to the horizontal position, back to the vertical position. The 90° in the opposite direction and back the original position. Performance of capacitor shall not have change and leads shall be undamaged.</td><td>When the capacitance is measured, there shall be no intermittent contacts, or open-or short-circuiting.

There shall be no such mechanical damage as terminal damage etc.</td></tr>
</table>

NO.	ITEM	TEST METHOD	SPECIFICATION
11.2	Vibration resistance	The frequency of the vibration shall vary uniformly within the range 10 to 55 Hz with the amplitude of 0.75mm, completing the cycle in the internal of one minute. The capacitor shall be securely mounted by its leads with hold the body of capacitor. The capacitor shall be vibrated in three mutually perpendicular directions for a period of 2 hours in each direction.	Capacitance: no unsteady. Appearance: no abnormal. Capacitance change: within ± 5% of initial measured value.
11.3	Solder -ability	The leads are dipped in the solder bath of Sn at 245℃±5℃for 2±0.5 seconds. The dipping depth should be set at 1.5~2.0 mm.	The solder alloy shall cover the 95% or more of dipped lead's area.

12. Reliability:

NO.	ITEM	TEST METHOD	SPECIFICATION
12.1	Soldering heat resistance	The leads immerse in the solder bath of Sn at 260℃±5℃ for 10±1seconds until a distance of 1.5~2.0mm from the case.	No visible damage or leakage of electrolyte. Capacitance change: Within±5% of the initial measured value Tanδ: Less than specified value. Leakage current: Less than specified value
12.2	Moisture Resistance	Subject the capacitor to 40℃±2℃ and 90% to 95% relative humidity for 504 hours.	Capacitance change: Within ± 20% of the initial measured value Tan δ : Less than 1.2 specified value. Leakage current: Less than specified value

J-SUCCEED CO. LTD.
TEL: +86 15869110800
E-mail: support@jsucceed.cn

ALUMINUM ELECTROLYTIC CAPACITORS

NO.	ITEM	TEST METHOD	SPECIFICATION
12.3	Load life	After 2000 hours continuous application of DC rated working voltage and rated ripple current at 105℃±2℃, Measurements shall be performed after 16 hours exposed at room temperature.	Capacitance change: within±20% of the initial specified value. Dissipation factor: Less than 200% of the initial specified value. Leakage current: Within initial specified value.
12.4	Shelf life	After storage for 1000 hours at 105℃±2℃without voltage application , at operating temperature which the capacitor can be operated continuously at rated voltage 30 min, Measurements shall be performed after exposed for 16 hrs after application of Testing.	
12.5	Storage at low temperature	The capacitor shall be stored at temperature of -40℃±3℃ for 16 hours, during which time be subjected to standard atmospheric conditions for 16 hours or more. After which measurements shall be made.	Capacitance change: Within ±10% of the initial value. Tanδ:less than specified value Leakage current: Less than specified value. Appearance :no Abnormal.
12.6	Pressure relief	DC test: Send the following electricity while applying the inverse voltage. Where case size D≤22.4mm:1 A d.c.max D > 22.4mm:10 A d.c.max Note: 1.This requirement applies to capacitors with a diameter of 6 mm or more. 2. When the pressure relief device does not open even 30 minutes after commencement of test, the test may be ended.	DC test circuit 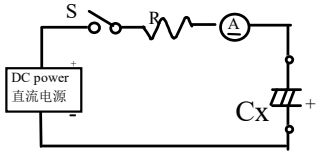 S : Switch Ⓐ: DC current meter Cx: testing capacitor The pressure relief device shall open in such a way as to avoid any damage of fire or explosion of capacitor elements(terminal and metal foil etc.) or cover.

J-SUCCEED CO. LTD.
TEL: +86 15869110800
E-mail: support@jsucceed.cn

capsonic

13. Part No.

Part Number System

NUP-400V 220 M H 200- T/A5.0

① ② ③ ④ ⑤ ⑥ ⑦

(1) Series

NUP

(2) Voltage(WV)

Voltage (WV)	4	6.3	10	16	25	35	50	63	80	100	110	115
Code	004	6R3	010	016	025	035	050	063	080	100	110	115

Voltage (WV)	125	160	165	200	220	250	330	350	400	450	500	550
Code	125	160	165	200	220	250	330	350	400	450	500	550

(3) Capacitance

Capacitance is show in microfarads (μF)

μF	0.1	0.47	1	2.2	22	220	2200	22000	21～25(KLT)
Code	0R1	R47	010	2R2	220	221	222	223	21T25

(4) Capacitance tolerance

Tolerance %	±5	±10	±15	±20	-0 to +100	-0 to +20	-10 to +20	-10 to +100
Code	J	K	L	M	P	R	V	W

Tolerance %	-15 to +20	-20 to +40	-20 to +80	-20 to +5	+5 to +20	-10 to +5	-30 to +20	-15 to +5
Code	N	X	E	A	B	C	D	F

(5) Case（D：mm）

Diameter	3	4	5	6	6.3	7	8	10	12.5	13	16	18	20	22	25	30
Code	A	B	C	D	E	1E	F	G	H	I	J	K	L	M	N	O

Diameter	35	36.5	40	42	45	46	50	51	52.3	55	60	63.5	65.5	76	90	100
Code	Q	R	S	T	U	V	W	X	Y	Z	1A	1B	1C	1D	1E	1F

J-SUCCEED CO. LTD.
TEL: +86 15869110800
E-mail: support@jsucceed.cn

capsonic

Part Number System

(6) Case（L：mm）

Description	5	7	11	12.5	25	35.5	40	100	110	111	120	130	140	150	220	250
Code	050	070	110	125	250	355	400	A00	A10	A11	A20	A30	A40	A50	B20	B50

(7) Lead treatment

Description	Taping(F:2.5mm) Ammo Packing	Taping(F:3.5mm) Ammo Packing	Taping(F:5.0mm) Ammo Packing	Taping(F7.5mm) Ammo Packing
Code	T2.5(T/A2.5)	T/A3.5	T/A5.0(S)	T/A7.5

Description	Lead cut		Lead forming cut			Lead forming cut	Lead forming cut	Frog forming cut
Code	F10	L/C	F4	F12	F/C	S1	F/S	F/W

Note：PET sleeve capacitors adding “Ⓟ” in Part No. System before.

J-SUCCEED CO. LTD.
TEL: +86 15869110800
E-mail: support@jsucceed.cn

14. Product Processing Diagram:

Taping size Φ 12.5
TP5mm pitch tape packing
Taping code number: T/A5.0

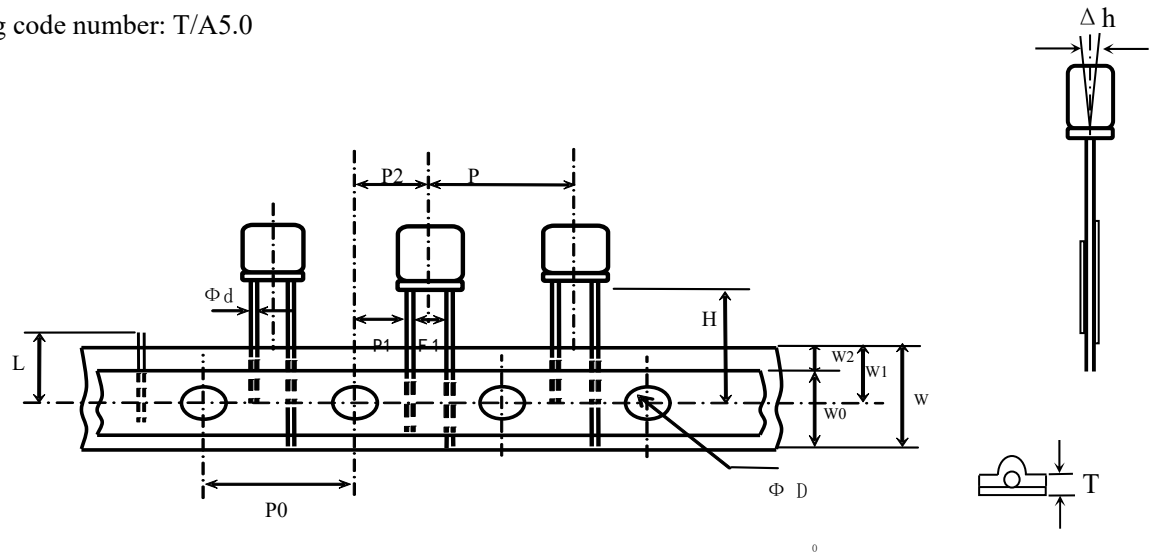

Table of dimensions:

Item	Symbol	Dimension	Tolerance	Reference
Lead-wire diameter	Φ d	0.6	±0.05	
Distance between centers of leads	F1	5.0	±0.5	
Height of component from tape center	H	18.5	+0.75 -0.5	
Component spacing	P	15.0	±1.0	
Perforation pitch	P0	15.0	±0.3	
Hole center to lead distance	P1	5.0	±0.5	
Hole center to component center	P2	7.5	±1.0	
Carrier tape width	W	18.0	±0.5	
Hole down tape width	W0	6.0-13.0	±0.1	
Feed hole position	W1	9.0	±0.5	
Hole down tape width	W2	0.5-1.5	max	
Diameter of sprocket holes	Φ D0	4.0	±0.2	
Body inclination forward or backward	△ h	0	±1.0	
Tape base thickness	t0	0.38	±0.05	
Total thickness of the combined carrier tape and hold down tape	T	0.7	±0.2	
Cut off position of defectives	L	11.0	or less	

J-SUCCEED CO. LTD.
TEL: +86 15869110800
E-mail: support@jsucceed.cn

15.Packing

Packing Standards: standards of the carton

1. Standards of the inner box of tapping products.

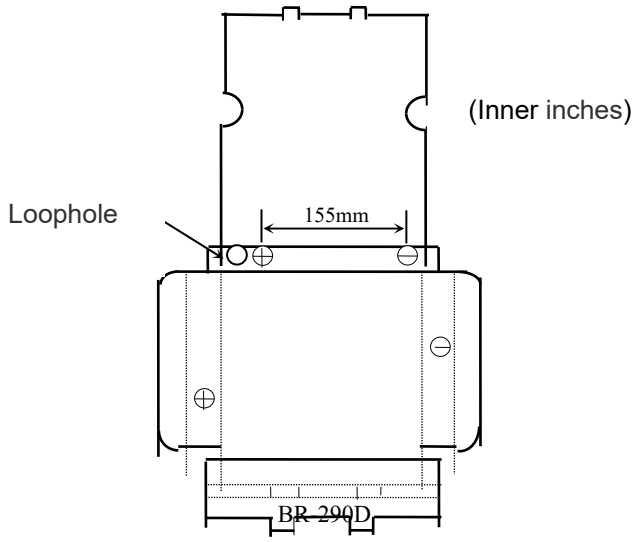

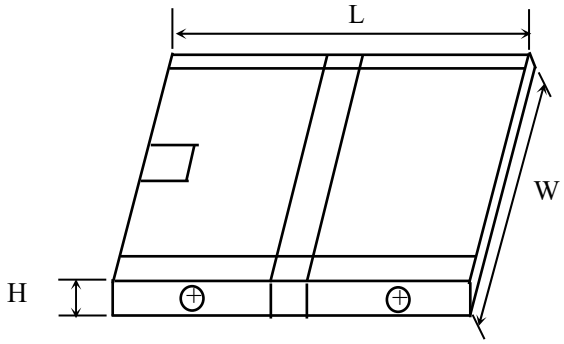

The inner box of tapping products

Specification	Size±2 (mm) L×W×H	Packing form	Textures	Quantity(PCS)
BR-290D	290X315X53	Tapping	H5A	500

2· Standards of the outer box of bulk and tapping products.

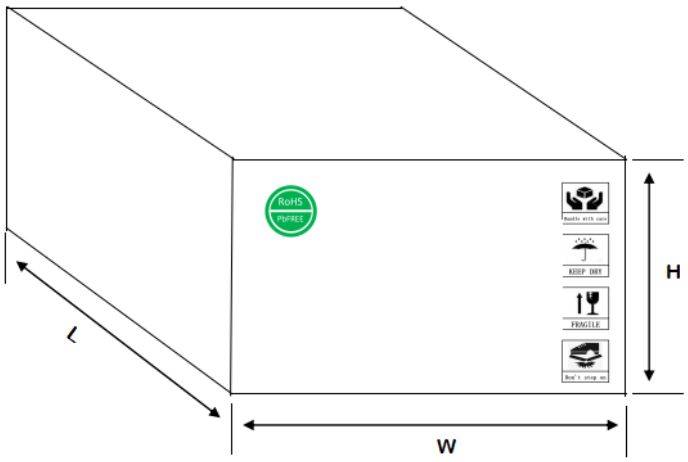

Specification	Size ±2 (mm) L×W×H	Packing form	Textures	Quantity(PCS)
BW-605E	605X325X255	Tapping	K=K	4000

J-SUCCEED CO. LTD.
TEL: +86 15869110800
E-mail: support@jsucceed.cn

3· Label:

Series	Size(mm)	Sample
Label	90×40	As follows

Electrolytic Capacitors

OPN: ×××× ②

③

Type: ⑤⑥⑦ Qty: ⑨ pcs

CPN: ④ Date:

① ⑩

KS2020011302460

①Customer name

② /

③ Part No.

④Customer

⑤Series

Part No.

⑥Voltage

⑦Capacity

⑧Size

⑨Quantity

⑩Work order number

J-SUCCEED CO. LTD.
TEL: +86 15869110800
E-mail: support@jsucceed.cn

Cautions for Using Aluminum Electrolytic Capacitors

1.When reverse voltage is applied on DC aluminum electrolytic capacitor ,the circuit will be short out and the capacitor will be damaged due to abnormal current flows through the capacitor.Please use non- polar types of capacitors when the positive voltage is applied on the cathode terminal.

2. When capacitor is used at higher voltage than the rated voltage, leakage current increased,characteristics drastically deteriorated and damaged in a short period may occur as a result.Please take extra caution that the peak voltage should not exceed the rated voltage.

3. Sudden charge and discharge

When aluminum electrolytic capacitors for general purpose-use are employed in rapid charge and discharge application, its life expectancy may be shortened resulted from capacitance decrease, heat rise, etc.

4. Storage of the capacitor

①We recommend the following conditions for storage:

Ambient temperature：5~35℃ ,Ambient humidity：<75%RH;

a) Storage life: ≤ 12 months;

b) **If storage life >12 months，the products need to be charged again before using;**

c) If Storage time >three years, the products need to be discarded;

d) Expiry Date: calculating from the date marked on the sleeve;

e) Please keep capacitors in the original package;

f) Avoid storing the capacitors under such circumstances:

※ With water and oil or damp &dewing location.

※ With gas and oil.

※ With toxic gases such as hydrogen sulfide, sulfurous acid, nitrous acid, chlorine, bromine and methane.

※ With direct sunlight, Ozone, ultraviolet rays or radiation.

5. If excessive ripple current is applied on the capacitor, excessive heat will be generated inside,the capacitance will be reduced and capacitor's life shall be shortened. Rated voltage has been marked on the capacitor; therefore, the peak value of the ripple voltage should be less than the rated voltage.

6. Ambient temperature

Life of aluminum electrolytic capacitor is affected by the ambient temperature. It is generally known that the life doubles for each 10℃ decrease in temperature.

7. Tensile strength of lead wire

When a strong force is applied to the lead wires or terminals, stress is put on the internal connections, which may result in short circuit, open circuit or increased leakage current. So it is not advisable to bend or handle a capacitor after it has been soldered to the PC board.

J-SUCCEED CO. LTD.
TEL: +86 15869110800
E-mail: support@jsucceed.cn

8. Heat resistance at the soldering process

During soldering process, secondary shrinkage or sleeve crack may occur when soldering temperature is too high or soldering time is too long.

9. Hole pitch and position of PC board

When designig a PC board , its hole pitch should be designed to coincide with the lead pitch(lead spacing) of the capacitor specified in the catalog or specifications.When a capacitor is forcibly inserted into an unmatched hole pitch,a force will put on the leads and which could result in a short circuit or increased leakage current.

10. Cleaning after soldering

① The aluminum electrolyte capacitors should be fee halogenated solvents during board cleaning after soldering. Use solvent proof capacitors when halogenated solvents are used.

② After cleaned with the solvent which should proof the quality of capacitors, the capacitors should not be kept in solvent environments of non-ventilated places. Let the capacitors after cleaning dry with hot blast fully above 10mins and the temperature of hot blast should not be over than specified upper limit of capacitors.

11. Adhesives、fixative and coating materials(coating agent)

① Do not use halogenated adhesives and coating materials to fix aluminum electrolytic capacitors.

②Do not cover up all the sealing area of capacitors with adhesives or coating materials(coating agent), make coverage only partial

12. Certificates

① ISO 9001:2008 Certificate

② ISO 14001:2004 Certificate

③ISO/TS 16949:2009 Certificate

④OHSAS 18001:2007 Certificate

※ RoHS2.0 compliance

Accord with the latest standard of RoHS2.0 , if customers have any special requirments, according to the relevant agreements which signed by both parts.